IPC-5120/7120

Desktop/Wallmount Chassis with front I/O Interfaces for ATX/mATX Motherboard

Features

- With front I/O interface and four to seven expansion slots
- Shockproof drive bay for one 5.25" ODD and two 3.5" HDDs
- LED indicators for power status and HDD activity
- Support four to seven half-size add-on cards

Specifications

		External	Internal
Drive Bay	5.25"	1	-
	3.5"	1	1
Cooling	Fans	1 (12 cm / 85 CFM) + 1 (4 cm / 10 CFM)	
	Air Filter	Yes	
Miscellaneous	LED Indicators	Power status and HDD activity	
	Control	Power switch and system reset button	
Environment		Operating	Non-Operating
	Temperature	0 ~ 40° C (32 ~ 104° F)	-20 ~ 60° C (-4 ~ 140° F)
	Humidity	10 ~ 85% @ 40° C, non-condensing	10 ~ 95% @ 40° C, non-condensing
	Vibration (5 ~ 500 Hz)	1 Grms	2 G
	Shock	10 G (with 11 ms duration, half sine wave)	30 G
Physical Characteristics	Dimensions (W x H x D)	IPC-5120: 320 x 164 x 316.5 mm (12.6" x 6.5" x 12.5") IPC-7120: 380 x 164 x 316.5 mm (15" x 6.5" x 12.5")	
	Weight	IPC-5120: 8.0 kg (17.6 lb) IPC-7120: 9.0 kg (19.8 lb)	

Front View

IPC-5120

IPC-7120

Inside View

Easy-to-maintain fan filter

Shock-resistant drive bay for holding an internal 3.5" HDD

Plug ring-lock securely fastens the power cord

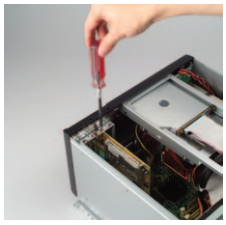

User-friendly mechanical design for installing an add-on card

All product specifications are subject to change without notice

Last updated : 22-Oct-2014

Dimensions

Unit: mm [inch]

IPC-5120

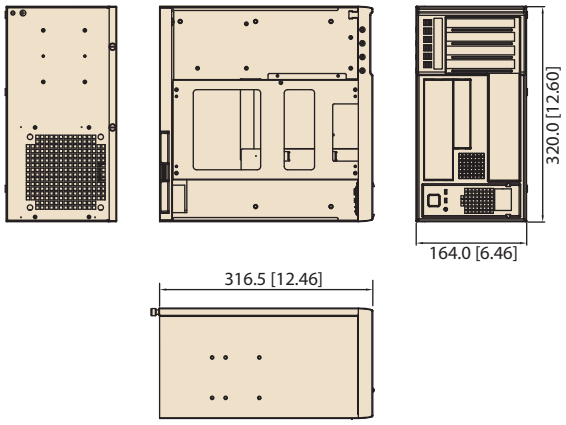

IPC-7120

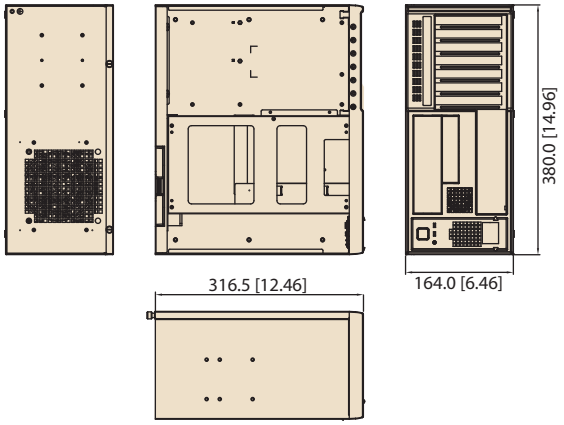

Installation

Unit: mm [inch]

IPC-5120

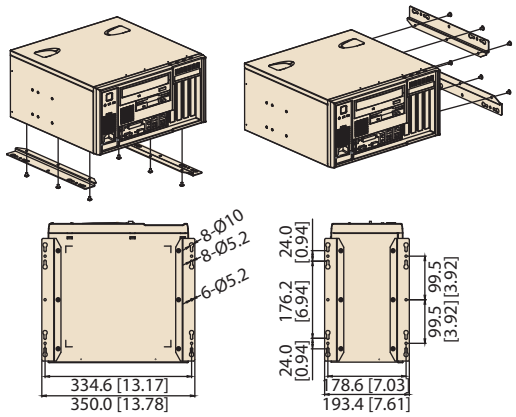

IPC-7120

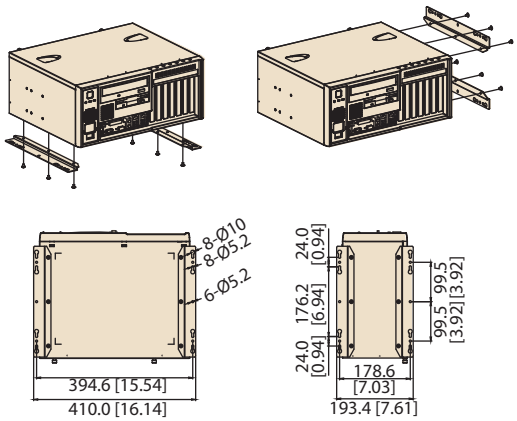

Ordering Information

Part Number	Description
IPC-5120-00CE	W/O PSU , with ATX switch
IPC-7120-00CE	W/O PSU , with ATX switch

Power Supply Options

Part Number	80 Plus Grade	Wattage	Type	Input
PS8-250FATX-XE	Bronze	250W	Single	AC 100~240V (full range)
PS8-350FATX-XE	Bronze	350W	Single	AC 100~240V (full range)

L-TRONDIRECT

Your Success is Our Passion!

35 YEARS OF SERVICE

www.L-TronDirect.com

800-830-9523

info@L-Tron.com

596 Fishers Station Dr | Victor, NY | 14564 | Suite 1 A

www.L-Tron.com

Get in touch with us on social media!